Servo Leveling System

Multi Line Laser

GP-888H Service manual

Giant Precision Instrument Co.,Ltd

Ver. 1.2

INDEX

1.0 Function Description

This instrument is equipped by semiconductor diode with wavelength of 635nm, which makes the laser beam has supreme visibility.

The instrument can make four vertical planes (vertical lines, floor lines, ceiling lines and a Four-direction right angle intersection), two horizontal planes and a down point. If the instrument is off-balance over ± 3.5°, the laser line gleam automatically to issue an alarm.

Emitting directions of the laser depicted as follows:

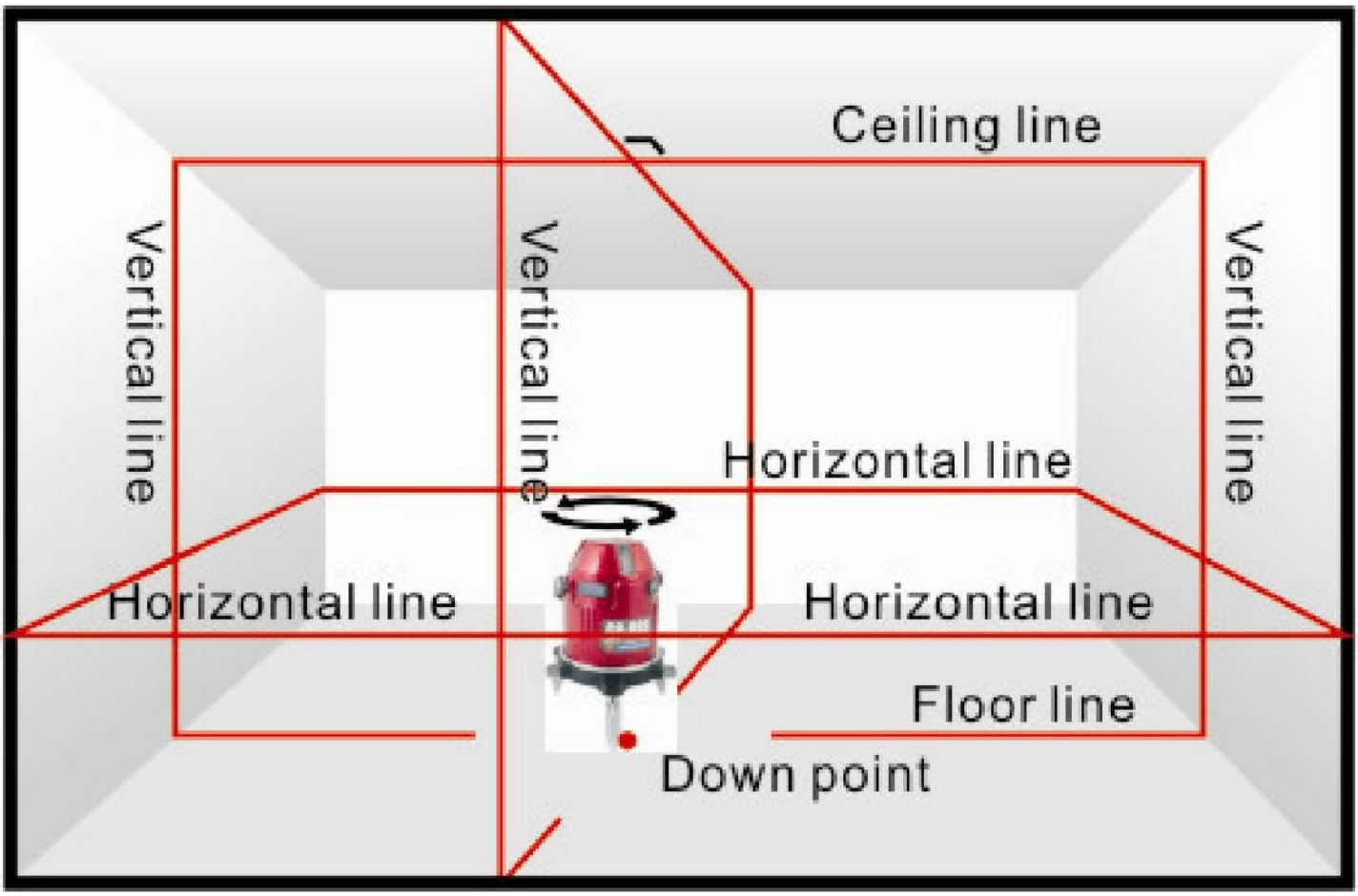

2.0 Structure

2.1 Assembling

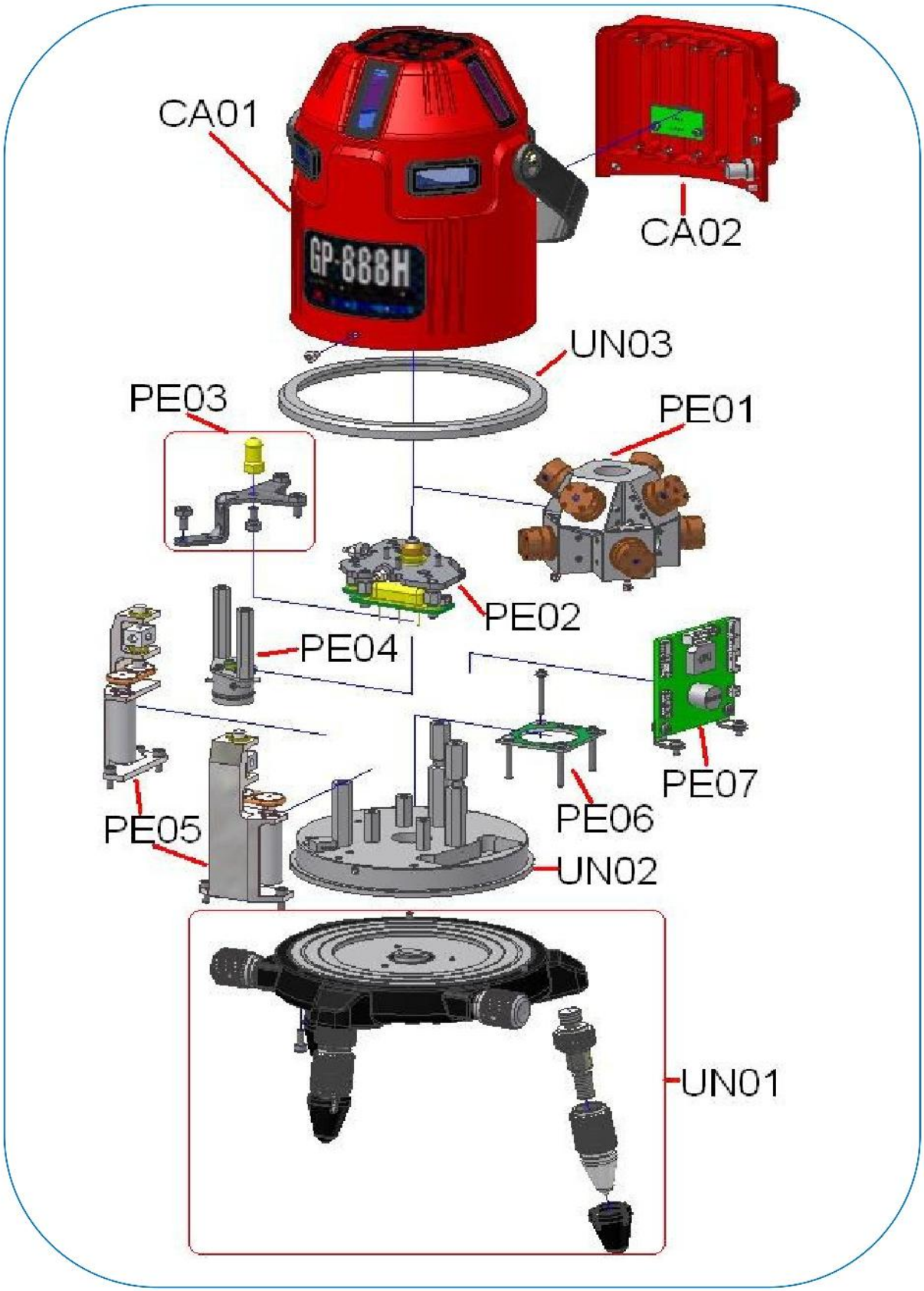

2.2 Case ASSY

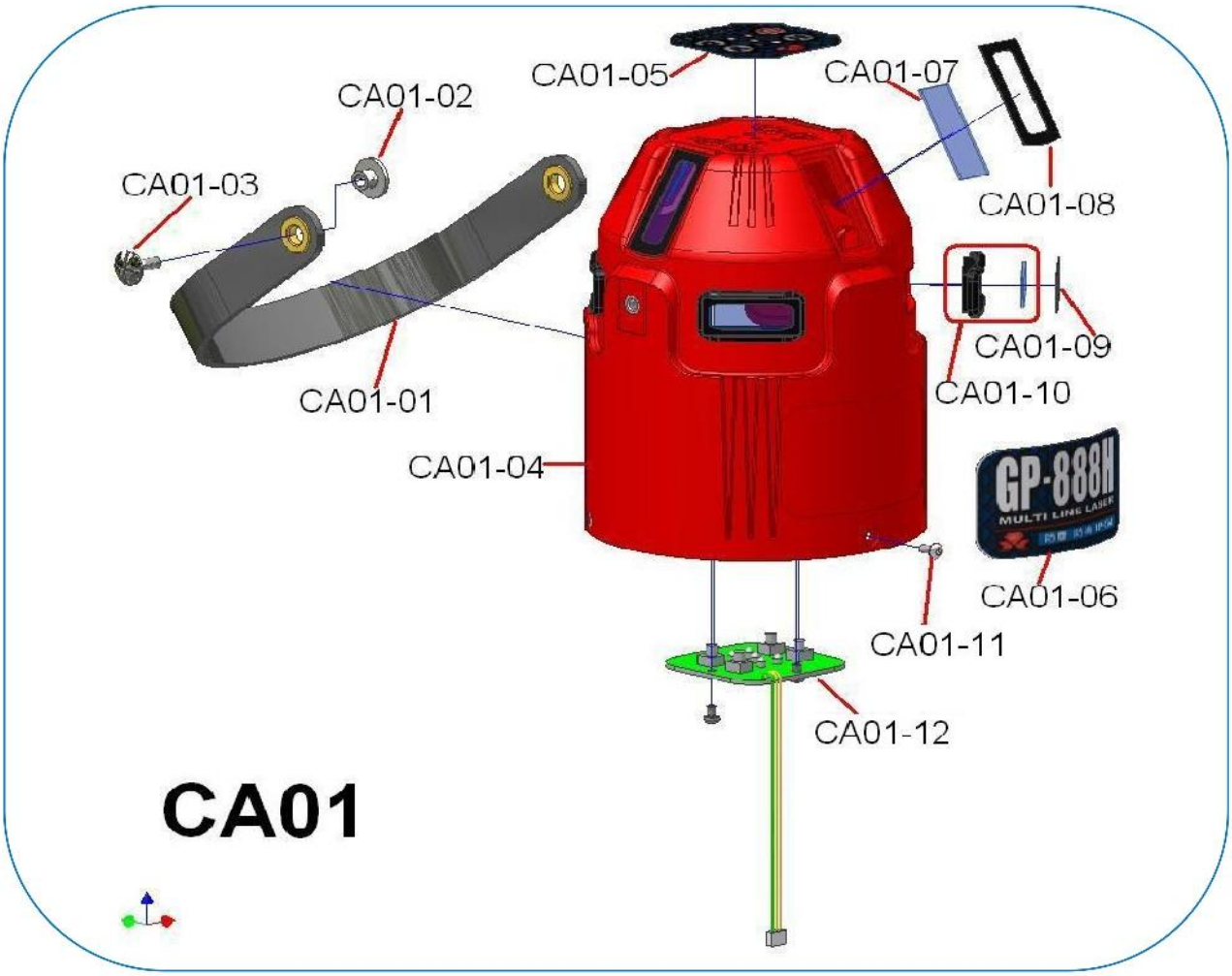
CA01-05
CA01-07
CA01-02
CA01-03
CA01-08
CA01-09
CA01-10
CA01-01
CA01-04
GP-888H
MULTI LINE LASER
CA01-06
CA01-11
CA01-12
CA01

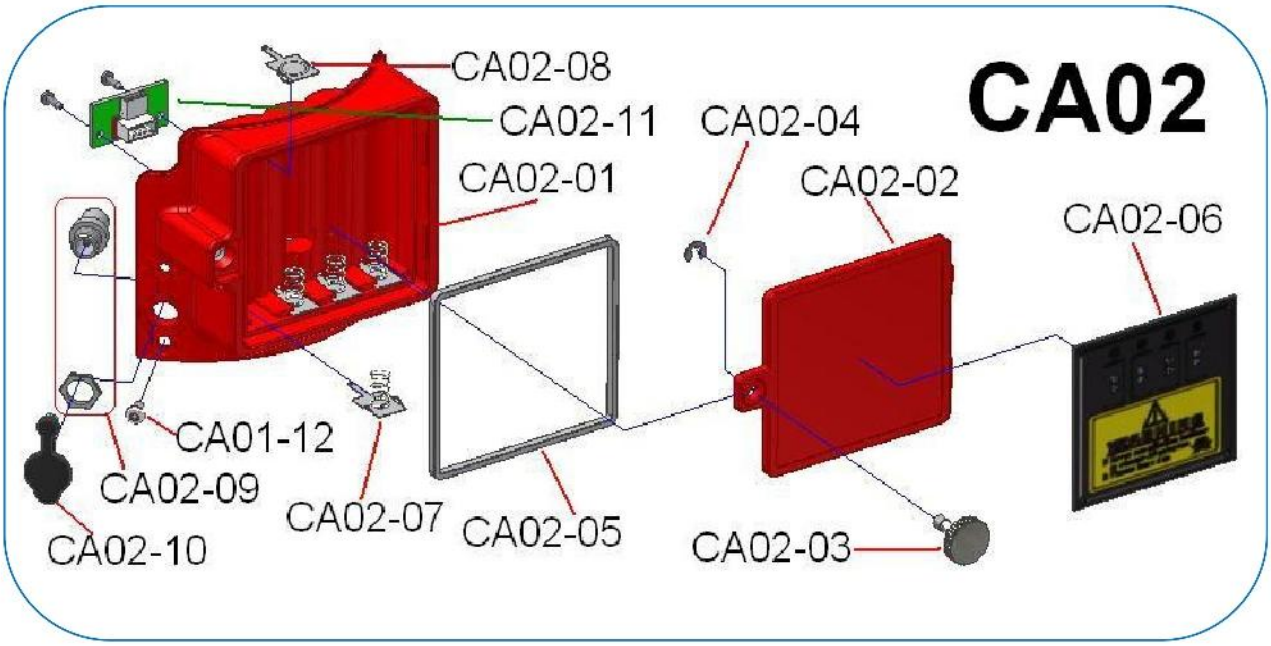
CA02-08
CA02-11
CA02-04
CA02
CA02-01
CA02-02
CA02-06
CA01-12
CA02-09
CA02-07
CA02-05
CA02-03
CA02-10

2.3 Pendulum ASSY

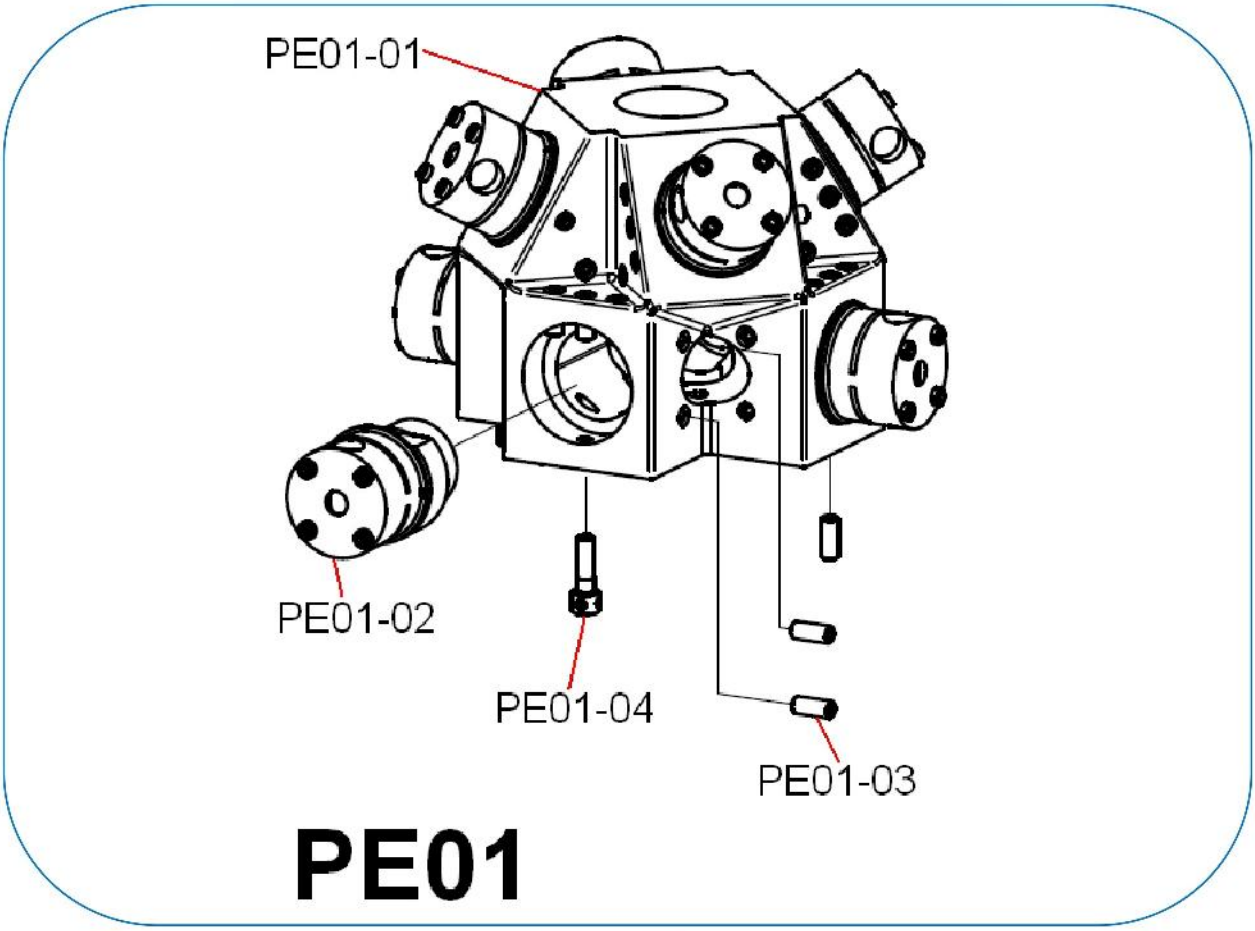

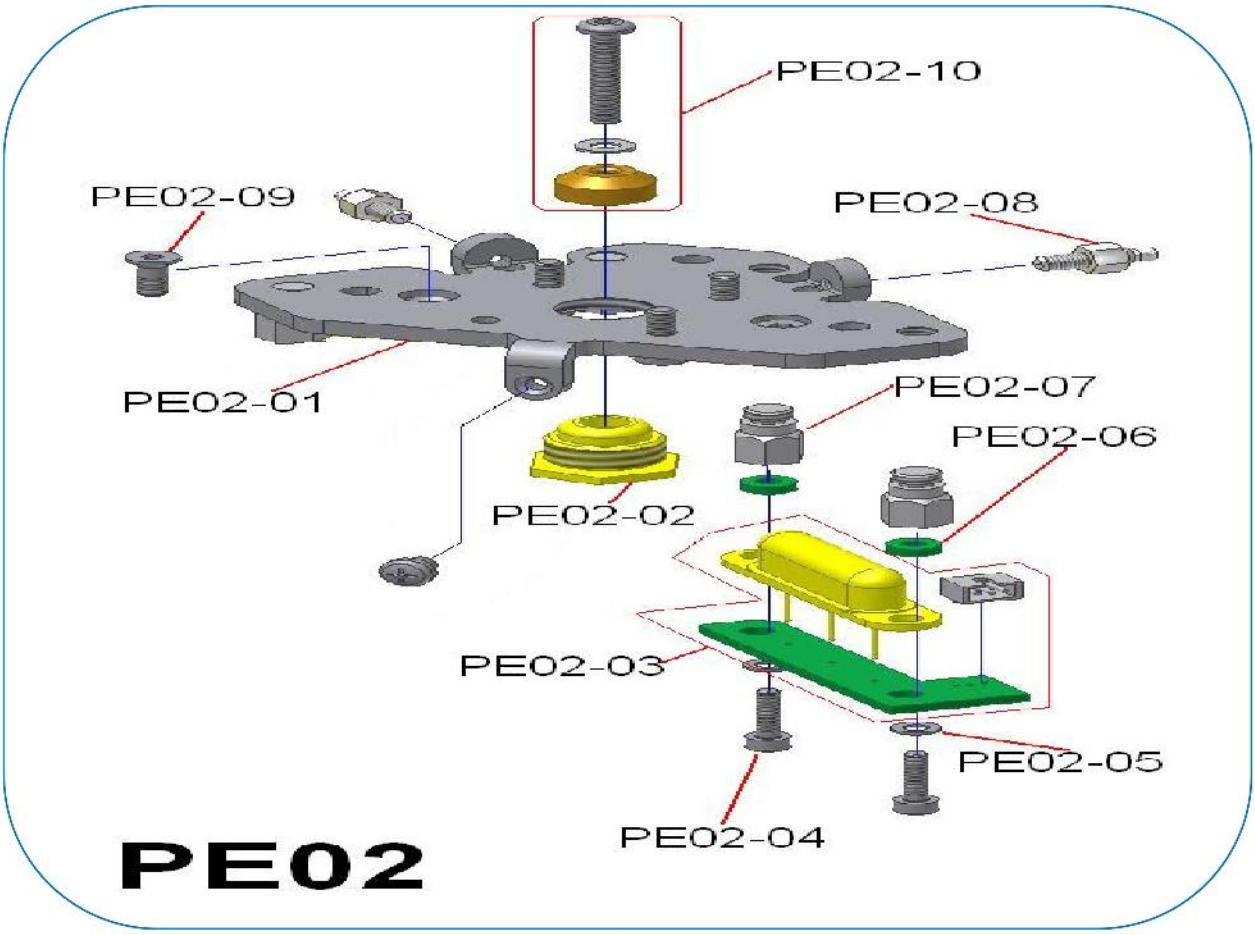

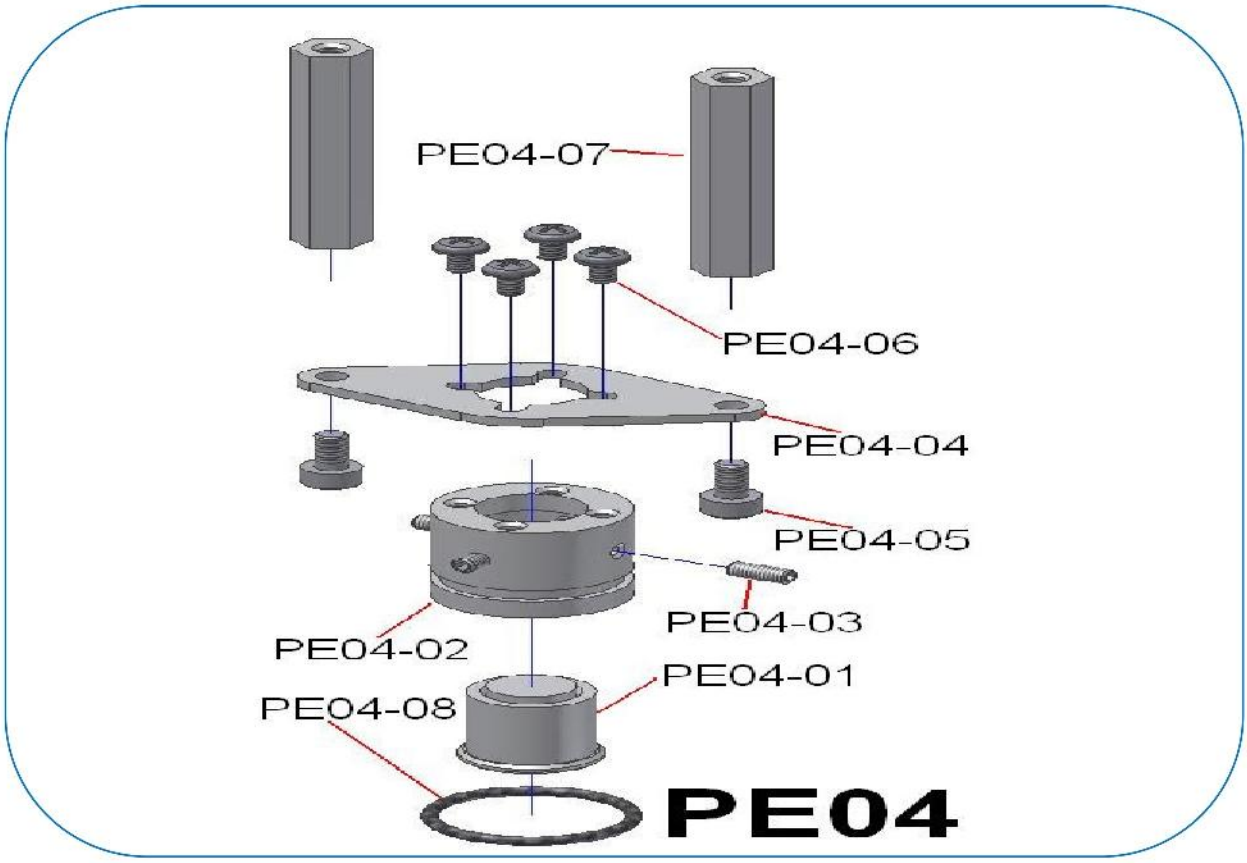
PE04-07
PE04-06
PE04-04
PE04-05
PE04-03
PE04-02
PE04-01
PE04-08
PE04

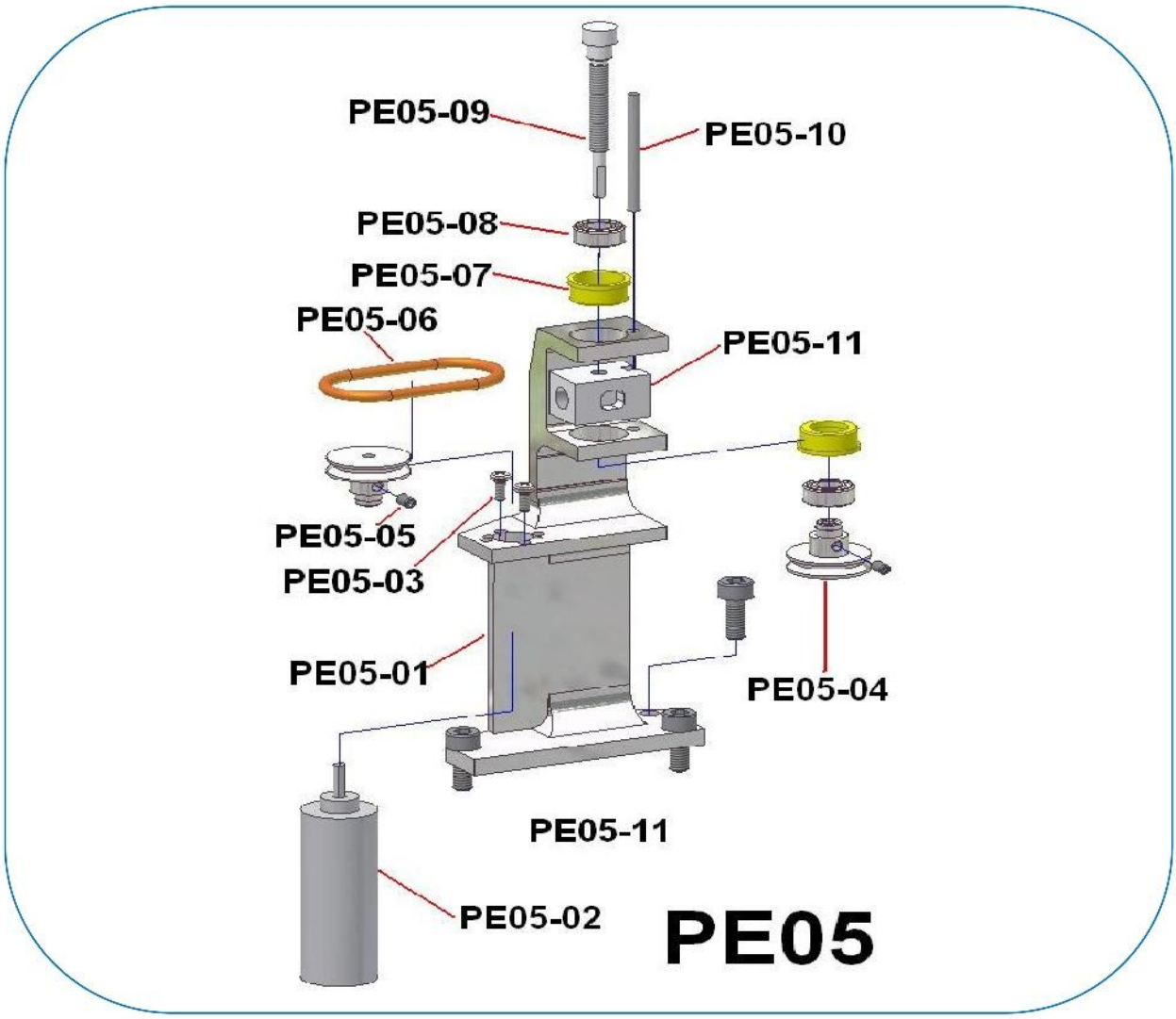
PE05-09
PE05-10
PE05-08
PE05-07
PE05-06
PE05-11
PE05-05
PE05-03
PE05-01
PE05-04
PE05-11
PE05-02
PE05

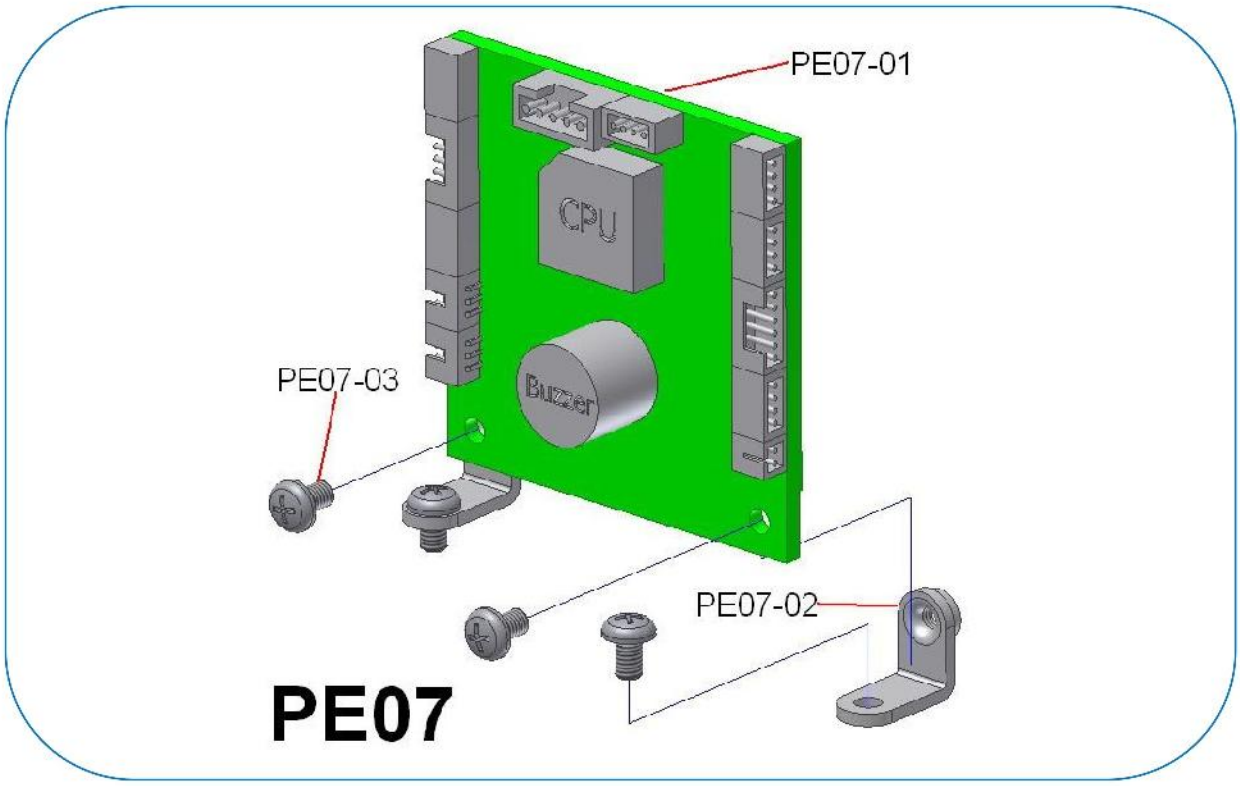
PE07-01
CPU
Buzzer
PE07-03
PE07-02
PE07

2.4 Under Base ASSY(UN01)

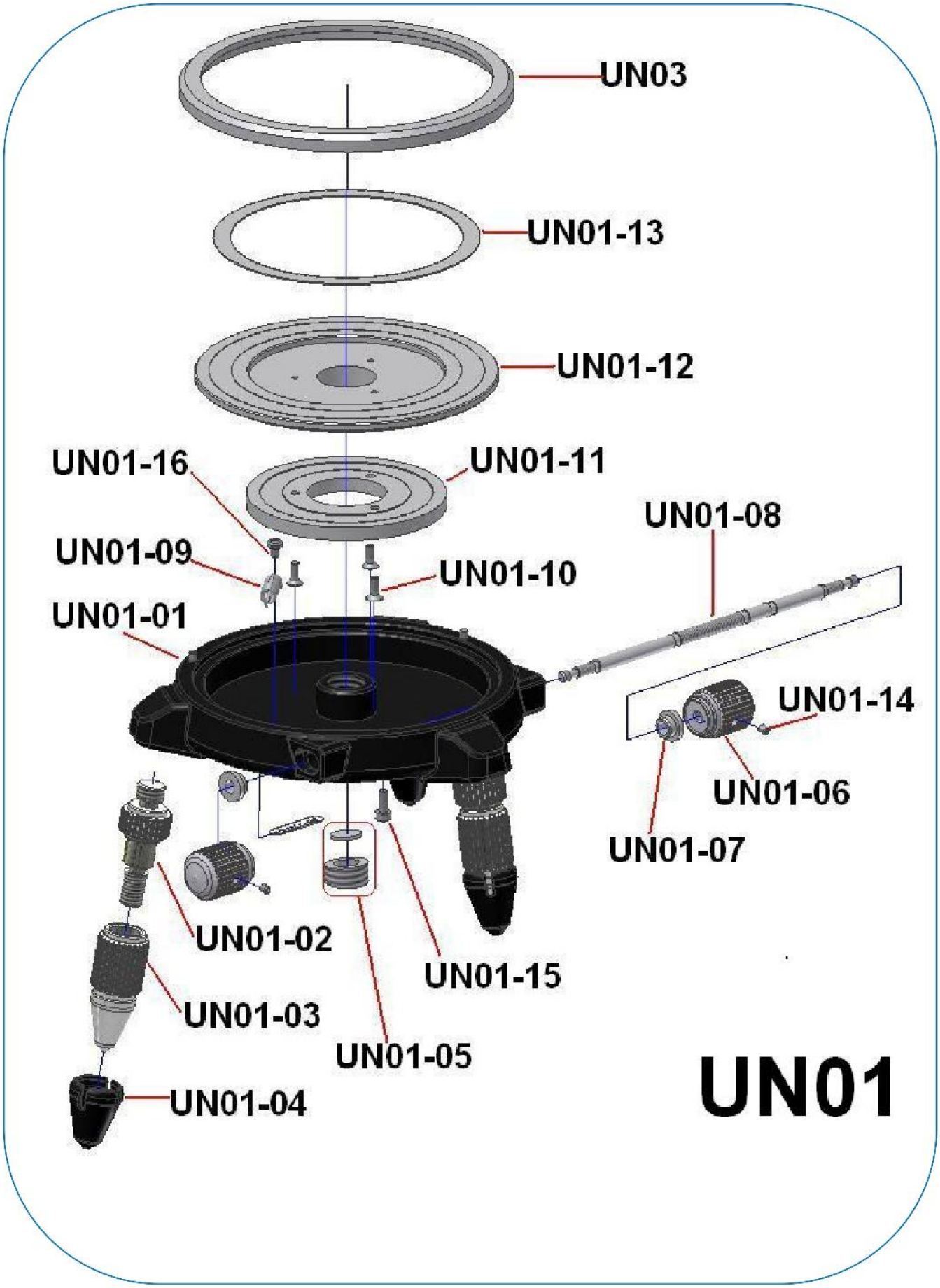

UN02

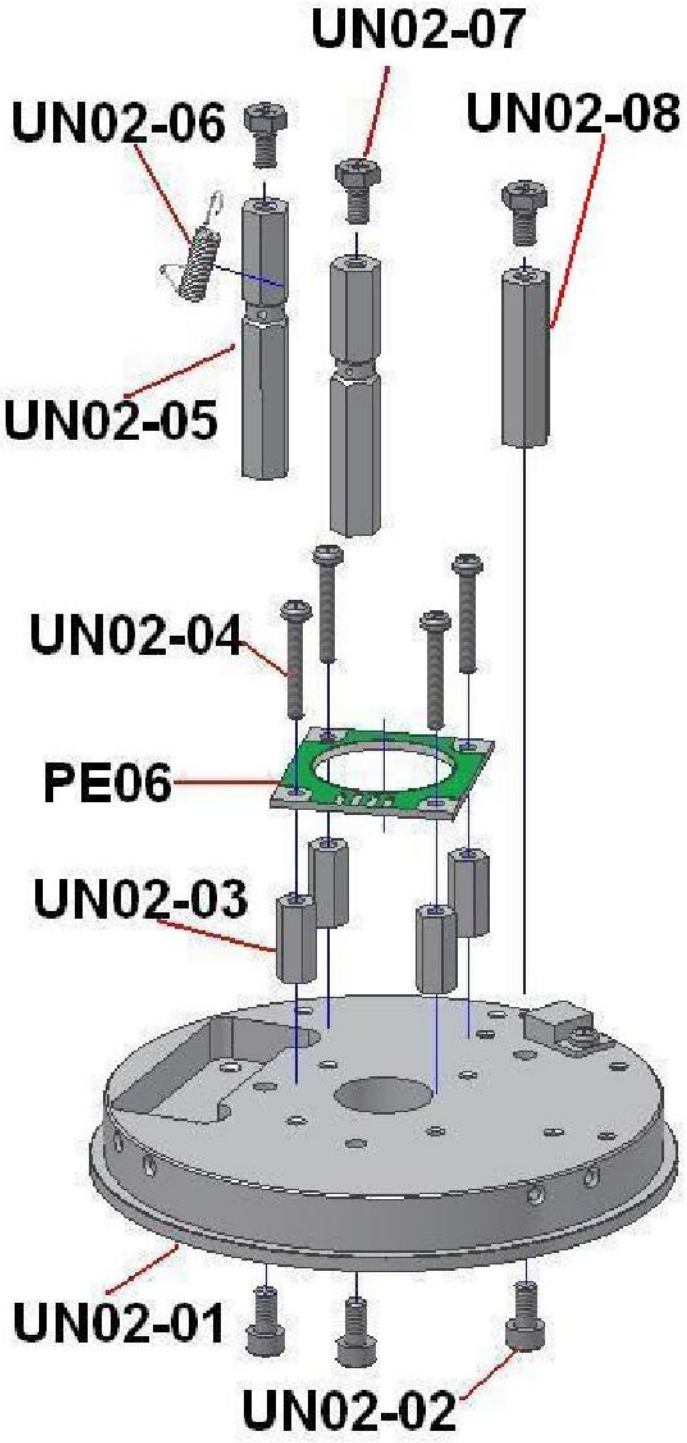
UN02-07
UN02-06
UN02-08
UN02-05
UN02-04
PE06
UN02-03
UN02-01
UN02-02

2.5 Part List

unit: USD

	Chart number	Part number	Part name	Quantity	Price	Remark
1	CA01	RGP888CA01	Main cover complete	1		
2	CA01-01	RGP888CA01-01	Belt	1		
3	CA01-02	RGP888CA01-02	Belt knob	2		
4	CA01-03	RGP888CA01-03	Belt screw	2		
5	CA01-04	RGP888CA01-04	Main cover	1		
6	CA01-05	RGP888CA01-05	SW label	1		
7	CA01-06	RGP888CA01-06	Model label	1		
8	CA01-07	RGP888CA01-07	V label	4		
9	CA01-08	RGP888CA01-08	V glass	4		
10	CA01-09	RGP888CA01-09	H label	4		
11	CA01-10	RGP888CA01-10	H window set	4		include H glass
12	CA01-11	RGP888CA01-11	Main cover screw	5		
13	CA01-12	RGP888CA01-12	SW PCB	1		include wire
14	CA02	RGP888CA02	Battery box complete	1		
15	CA02-01	RGP888CA02-01	Battery box	1		
16	CA02-02	RGP888CA02-02	Battery cover	1		
17	CA02-03	RGP888CA02-03	Battery cover screw	1		
18	CA02-04	RGP888CA02-04	C lock	1		
19	CA02-05	RGP888CA02-05	Battery rubber	1		
20	CA02-06	RGP888CA02-06	Battery cover label	1		
21	CA02-07	RGP888CA02-07	Negative spring	4		
22	CA02-08	RGP888CA02-08	Positive pad	4		
23	CA02-09	RGP888CA02-09	DC JACK set	1		
24	CA02-10	RGP888CA02-10	DC JACK rubber	1		
25	CA02-11	RGP888CA02-11	RS232 port set	1		

	Chart number	Part number	Part name	Quantity	Price	Remark
1	PE01	RGP888PE01	Laser module base complete	1		
2	PE01-01	RGP888PE01-01	Laser module base	1		
3	PE01-02	RGP888PE01-02	Sanyo 10mW laser module	8		
4	PE01-03	RGP888PE01-03	Screw for adjustment	28		
5	PE01-04	RGP888PE01-04	Special Screw	4		
6	PE02	RGP888PE02	Leveling base complete	1		include 2 tilt sensors
7	PE02-01	RGP888PE02-01	Leveling base	1		
8	PE02-02	RGP888PE02-02	Motion head	1		
9	PE02-03	RGP888PE02-03	Tilt sensor set	2		include wire
10	PE02-04	RGP888PE02-04	Tilt sensor board	4		
11	PE02-05	RGP888PE02-05	Washer	4		
12	PE02-06	RGP888PE02-06	Insulation washer	4		
13	PE02-07	RGP888PE02-07	Sensor polo	4		
14	PE02-08	RGP888PE02-08	motion stick	2		
15	PE02-09	RGP888PE02-09	Polo screw	2		
16	PE02-10	RGP888PE02-10	Center Screw set	1		
17	PE03	RGP888PE03	Center axis base complete	1		
18	PE04	RGP888PE04	DP laser module complete	1		
19	PE04-01	RGP888PE04-01	DP laser module set	1		
20	PE04-02	RGP888PE04-02	DP laser module housing	1		
21	PE04-03	RGP888PE04-03	Screw for adjustment	4		
22	PE04-04	RGP888PE04-04	DP laser module base	1		
23	PE04-05	RGP888PE04-05	DP polo screw	2		
24	PE04-06	RGP888PE04-06	DP housing screw	4		
25	PE04-07	RGP888PE04-07	DP polo	2		
26	PE04-08	RGP888PE04-08	Limit spring	1		
27	PE05	RGP888PE05	Leveling motor complete	2		
28	PE05-01	RGP888PE05-01	Motor clamp	2		
29	PE05-02	RGP888PE05-02	Leveling motor	2		
30	PE05-03	RGP888PE05-03	Motor screw	4		
31	PE05-04	RGP888PE05-04	Transmission wheel	4		
32	PE05-05	RGP888PE05-05	Wheel screw	4		
33	PE05-06	RGP888PE05-06	O ring	2		
34	PE05-07	RGP888PE05-07	Bearing sheath	4		
35	PE05-08	RGP888PE05-08	Bearing	4		
36	PE05-09	RGP888PE05-09	Transmission shaft	2		
37	PE05-10	RGP888PE05-10	Pin	2		
38	PE05-11	RGP888PE05-11	Moter clamp screw	6		
39	PE06	RGP888PE06	Limit PCB	1		include wire
40	PE07	RGP888PE07	Main PCB complete	1		
41	PE07-01	RGP888PE07-01	Main PCB	1		
42	PE07-02	RGP888PE07-02	Stander for mian PCB	2		
43	PE07-03	RGP888PE07-03	Stander screw	4		

	Chart number	Part number	Part name	Quantity	Price	Remark
1	UN01	RGP888UN01	Tripod base complete	1		
2	UN01-01	RGP888UN01-01	Tripod base	1		
3	UN01-02	RGP888UN01-02	Leveling Screw	3		
4	UN01-03	RGP888UN01-03	Leveling screw shaft	3		
5	UN01-04	RGP888UN01-04	Leveling screw rubber	3		
6	UN01-05	RGP888UN01-05	DP galss set	1		
7	UN01-06	RGP888UN01-06	Fine tuning knob	2		
8	UN01-07	RGP888UN01-07	Fine tuning washer	2		
9	UN01-08	RGP888UN01-08	Fine tuning shaft	1		
10	UN01-09	RGP888UN01-09	Fine tuning spring	1		
11	UN01-10	RGP888UN01-10	Fine tuning gear screw	3		
12	UN01-11	RGP888UN01-11	Fine tuning gear	1		
13	UN01-12	RGP888UN01-12	Rotation base	1		
14	UN01-13	RGP888UN01-13	Rotation base washer	1		
15	UN01-14	RGP888UN01-14	Fine tuning knob screw	2		
16	UN01-15	RGP888UN01-15	Fixing ring screw	3		
17	UN01-16	RGP888UN01-16	Fine tuning spring screw	1		
18	UN02	RGP888UN02	Movement base complete	1		
19	UN02-01	RGP888UN02-01	Movement base	1		
20	UN02-02	RGP888UN02-02	Center axis base screw	3		
21	UN02-03	RGP888UN02-03	Limit PCB polo	4		
22	UN02-04	RGP888UN02-04	Limit PCB polo screw	4		
23	UN02-05	RGP888UN02-05	Center axis base polo A	2		
24	UN02-06	RGP888UN02-06	Movement spring	1		
25	UN02-07	RGP888UN02-07	Center axis base complete screw	3		
26	UN02-08	RGP888UN02-08	Center axis base polo B	1		
27	UN03	RGP888UN03	Fixing ring	1		

3.0 Malfunction Exclude

3.1 Failure to switching on the instrument

Causes:

(1) The instrument can not be turn on when the battery voltage is less then 4V.

(2) The plug that is connecting the battery box is not well-connecting with the main board.

(3) The button panel is not well connected with the main board.

(4) The button is damaged or stuck.

(5) The battery is not put in place.

Elimination:

(1) Please re-new all batteries.

(2) Take off the case and reconnect or replace the power plug with the main board.

(3) Take off the case and reconnect or replace the power line that connect with the button panel and the main board.

(4) Please replace the button.

(5) Please place the battery firmly in place.

Attention:

If there is damage with the main board, it may also cause the same problem (The rate is rare). In that case, please contact manufacturer and look for more service.

3.2 No laser after pushed on

Cause:

The wire between laser model and board are not connected causing the power un-able to go through.

Elimination:

Take off the case and check the connecting between the laser model and the main board.

Attention:

It will also cause the laser model trouble shot when the main board, wire or laser model are damaged. In that case, please contact manufacturer and look for more service.

3.3 When switched on, fail to self alarm when un-leveled.

Causes:

(1) The alarm on the board is damaged.

(2) The subminiature switch on the motor is damaged.

Elimination:

(1) Take off the shell and replace the alarm.

(2) Take off the shell and replace the subminiature switch that is damaged.

3.4 Failure to leveling after the switched on, or leveling problems.

Causes:

(1) The leveling pin connecting to the motor is out of place.

(2) The axis drive is damaged.

(3) The axis drive pin is not well-connecting to the board or to the axis drive.

(4) The battery is low.

(5) The motor belt is not in place, loose, dirty, or damaged.

(6) The motor is not well connected to the board.

(7) The leveling plat form is bended or damaged.

(8) The center shaft cap is loose.

(9) The motor drive is out of place or stuck.

(10) The leveling plat form screw is loose.

Elimination:

(1) Take off the shell and reconnect the pin.

(2) Take off the shell and reconnect the axis drive.

(3) Please check the connection between the axis drive and the board.

(4) Please re-new the battery. (Working voltage 4V~6V)

(5) Take off the shell and place or clean the belt.

(6) Please check the wire that connects the motor and the board.

Elimination:

(7) Please replace the leveling plat form.

(8) Please tighten the center shaft cap.

(9) If the motor drive is out of place, please put it firmly bock in place. If it is stuck, please loose the belt drive or replace it.

(10) Please screw it back to place.

4.0 Specification

Line: two horizontal lines; four vertical lines; one down point

Precision: ±1mm / 10M

Down point: ±1mm / 1M

Self leveling range: Approx. ±3.5°

Working range: Approx. 25M (indoor).Approx. 70M (with detector)

Laser wavelength: Laser Diode：635nm/10mW×8； Down point 650nm×1

Output power: 3mw（Laser class III）

Working temperature: -10℃~+40℃

Power: DC 6V (4 section of 5# dry batteries)

Operation time: Approx.6 hours with all lines ON

Measurement: 152(φ) × 223(h) mm

Weight: 1.9kg

Protection Classification: IP 54